Solutions - Homework 4

(Due date: March 31st @ 5:30 pm)

Presentation and clarity are very important! Show your procedure!

Problem 1 (12 pts)

- Complete the timing diagram of the following circuit. $G = G_3G_2G_1G_0 = 1011$, $Q = Q_3Q_2Q_1Q_0$

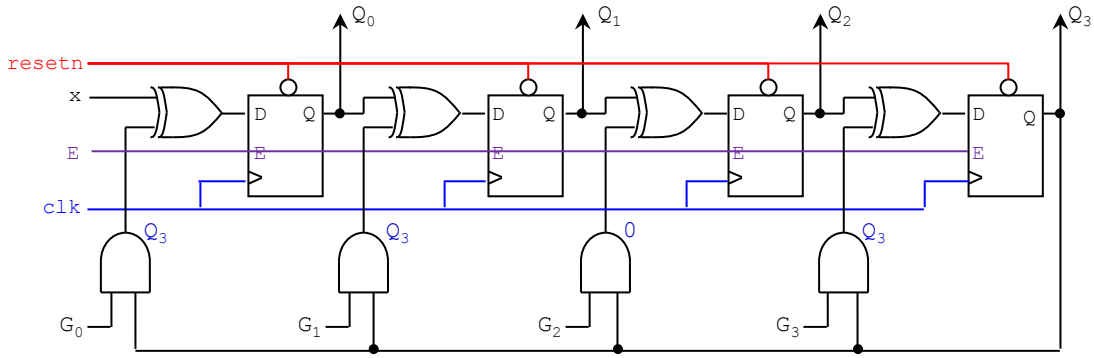

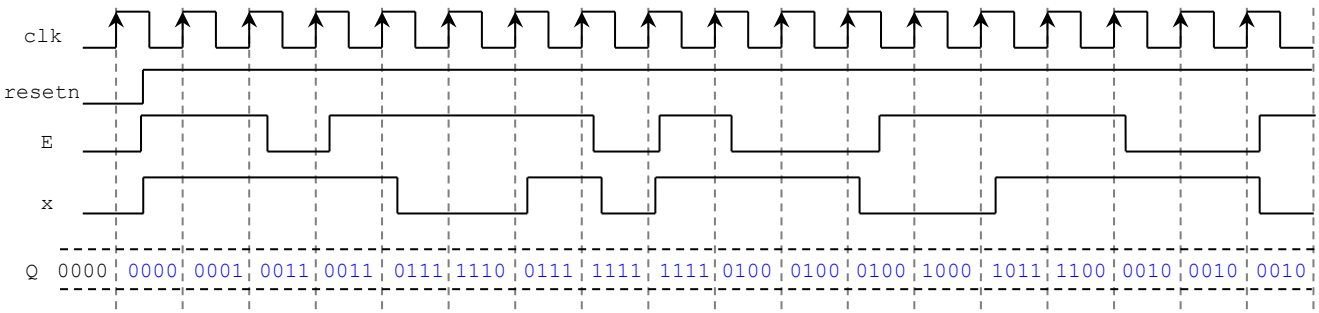

Problem 2 (21 pts)

- Design a counter using a Finite State Machine (FSM):
  Counter features:
  - ✓ Count: **000**, 001, 011, 101, 111, 010, 100, 110, **000**, 001, 011, 101, …
  - ✓ Input E: Synchronous input that increases the count when it is set to '1'.
  - ✓ Output z: It becomes '1' when the count is 110.
  - ✓ resetn: Asynchronous active-low input signal. It initializes the count to 000 .

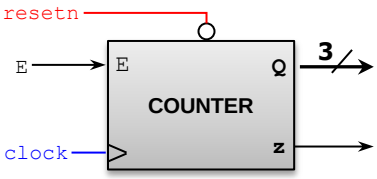

- Provide the State Diagram (any representation), State Table, and the Excitation Table of this circuit. (13 pts)
- Provide the excitation equations (simplify your circuit using K-maps or the Quine-McCluskey algorithm) (5 pts)
- Sketch the circuit. Is this a Mealy or a Moore machine? Why? (3 pts)

- *State Diagram and State Table*:

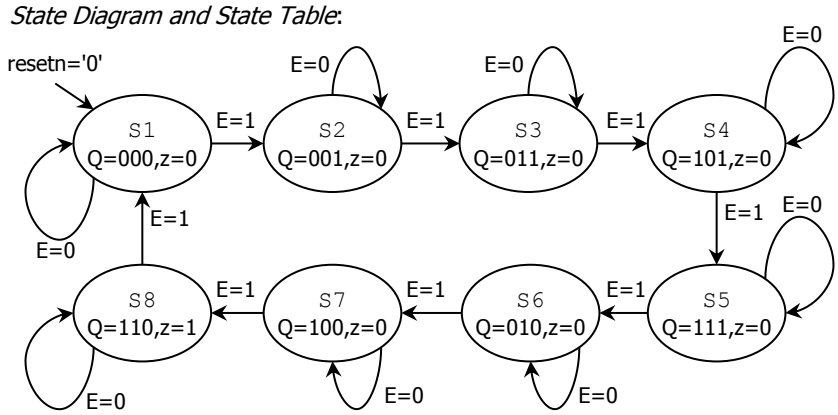

E	PRESENT STATE	NEXT STATE	z
0	S1	S1	0
0	S2	S2	0
0	S3	S3	0
0	S4	S4	0
0	S5	S5	0
0	S6	S6	0
0	S7	S7	0
0	S8	S8	1
1	S1	S2	0
1	S2	S3	0
1	S3	S4	0
1	S4	S5	0
1	S5	S6	0
1	S6	S7	0
1	S7	S8	0
1	S8	S1	1

The output z only depends on the present state ⇒ Moore FSM.

- *State Assignment and Excitation Table*:

  - ✓ S1: Q = 000
  - ✓ S2: Q = 001
  - ✓ S3: Q = 011
  - ✓ S4: Q = 101
  - ✓ S5: Q = 111
  - ✓ S6: Q = 010
  - ✓ S7: Q = 100
  - ✓ S8: Q = 110

	PRESENT STATE	NEXTSTATE	
E	$Q_2Q_1Q_0$ (t)	$Q_2Q_1Q_0$ (t+1)	z
0	0 0 0	0 0 0	0
0	0 0 1	0 0 1	0
0	0 1 1	0 1 1	0
0	1 0 1	1 0 1	0
0	1 1 1	1 1 1	0
0	0 1 0	0 1 0	0
0	1 0 0	1 0 0	0
0	1 1 0	1 1 0	1
1	0 0 0	0 0 1	0
1	0 0 1	0 1 1	0
1	0 1 1	1 0 1	0
1	1 0 1	1 1 1	0
1	1 1 1	0 1 0	0
1	0 1 0	1 0 0	0
1	1 0 0	1 1 0	0
1	1 1 0	0 0 0	1

- *Excitation equations and minimization:*

$$Q_2(t+1) \leftarrow \bar{E}Q_2 + Q_2\overline{Q_1} + E\overline{Q_2}Q_1 = \overline{EQ_1}Q_2 + EQ_1\overline{Q_2}$$
$$= Q_2 \oplus (EQ_1)$$

$$Q_1(t+1) \leftarrow \bar{E}Q_1 + EQ_2\overline{Q_1} + Q_2Q_1Q_0 + E\overline{Q_1}Q_0$$
$$= \bar{E}Q_1 + E\overline{Q_1}(Q_2 + Q_0) + Q_2Q_1Q_0$$

$$Q_0(t+1) \leftarrow \overline{Q_1}Q_0 + \bar{E}Q_0 + \overline{Q_2}Q_0 + E\overline{Q_2}\,\overline{Q_1}$$
$$= \overline{EQ_2Q_1}Q_0 + E\overline{Q_2}\,\overline{Q_1}$$

$$z = Q_2Q_1\overline{Q_0}$$

Q_2 (t+1)

Q_1Q_0 \ EQ_2	00	01	11	10
00	0	1	1	0
01	0	1	1	0
11	0	1	0	1
10	0	1	0	1

Q_1 (t+1)

Q_1Q_0 \ EQ_2	00	01	11	10
00	0	0	1	0
01	0	0	1	1
11	1	1	1	0
10	1	1	0	0

Q_0 (t+1)

Q_1Q_0 \ EQ_2	00	01	11	10
00	0	0	0	1
01	1	1	1	1
11	1	1	0	1
10	0	0	0	0

z

Q_1Q_0 \ EQ_2	00	01	11	10
00	0	0	0	0
01	0	0	0	0
11	0	0	0	0
10	0	1	1	0

- *Circuit Implementation:*

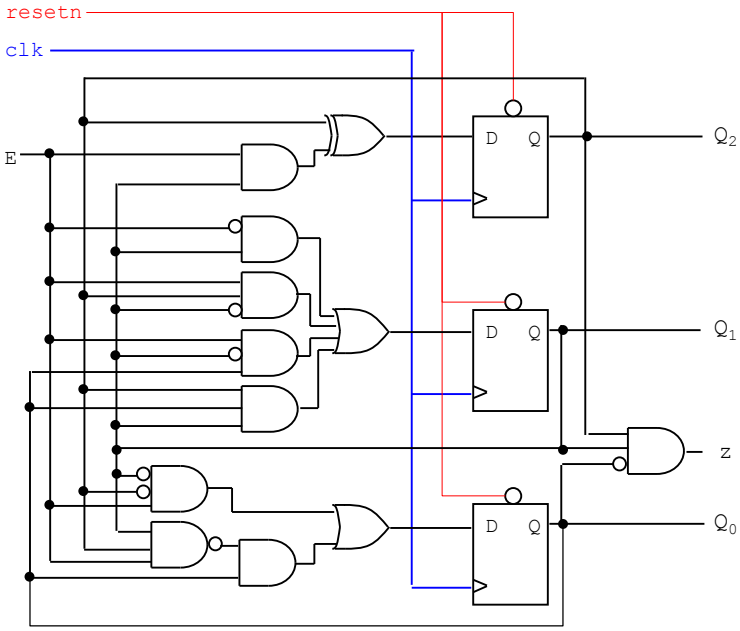

PROBLEM 3 (20 PTS)

- Sequence detector: The machine generates $z = 1$ when it detects the sequence 00110101. Once the sequence is detected, the circuit looks for a new sequence.

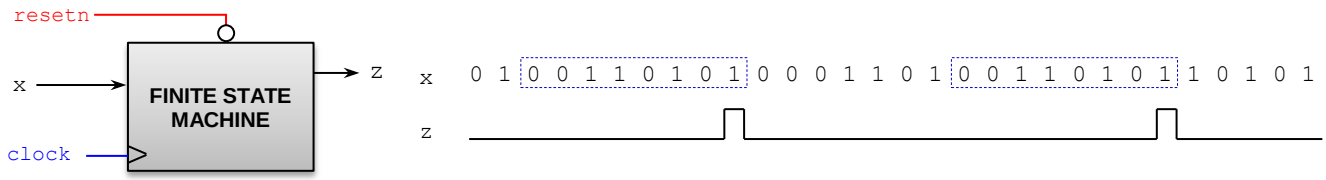

✓ Draw the State Diagram (any representation) of this circuit with input x and output z. (5 pts)
✓ Complete the State Table and the Excitation Table. (4 pts)
✓ Which type is this FSM? (Mealy) (Moore) Why? _____

State Assignment:
S1: Q = 000
S2: Q = 001
S3: Q = 010
S4: Q = 011
S5: Q = 100
S6: Q = 101
S7: Q = 110
S8: Q = 111

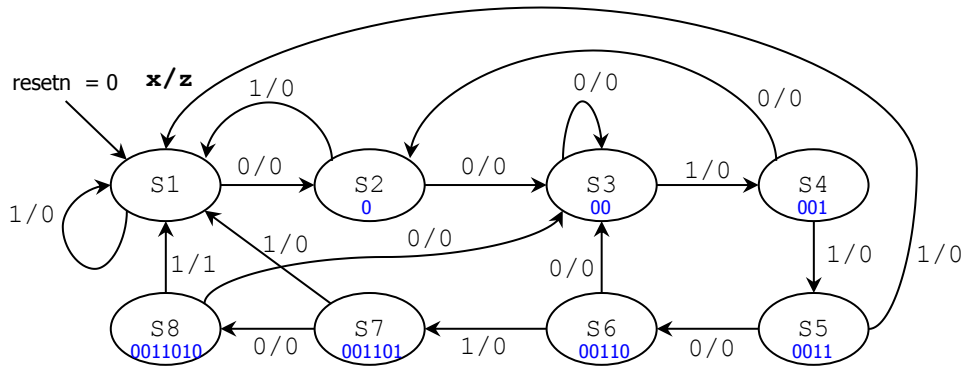

x	PRESENT STATE	NEXT STATE	z
0	S1	S2	0
0	S2	S3	0
0	S3	S3	0
0	S4	S2	0
0	S5	S6	0
0	S6	S3	0
0	S7	S8	0
0	S8	S3	0
1	S1	S1	0
1	S2	S1	0
1	S3	S4	0
1	S4	S5	0
1	S5	S1	0
1	S6	S7	0
1	S7	S1	0
1	S8	S1	1

	PRESENT STATE	NEXTSTATE	
x	$Q_2Q_1Q_0$ (t)	$Q_2Q_1Q_0$ (t+1)	z
0	0 0 0	0 0 1	0
0	0 0 1	0 1 0	0
0	0 1 0	0 1 0	0
0	0 1 1	0 0 1	0
0	1 0 0	1 0 1	0
0	1 0 1	0 1 0	0
0	1 1 0	1 1 1	0
0	1 1 1	0 1 0	0
1	0 0 0	0 0 0	0
1	0 0 1	0 0 0	0
1	0 1 0	0 1 1	0
1	0 1 1	1 0 0	0
1	1 0 0	0 0 0	0
1	1 0 1	1 1 0	0
1	1 1 0	0 0 0	0
1	1 1 1	0 0 0	1

This is a Mealy FSM. The output z depends on the input as well as the present state.

- Given the following FSM circuit. (w: input, z: output, Q_1Q_0: state) (10 pts)
  - ✓ Provide the Excitation Table, State Table, and the State Diagram (any representation).
  - ✓ Get the excitation equations and the Boolean equation for z. (6 pts)
  - ✓ Which type is this FSM? (1 pt.)
    (Mealy) (Moore)

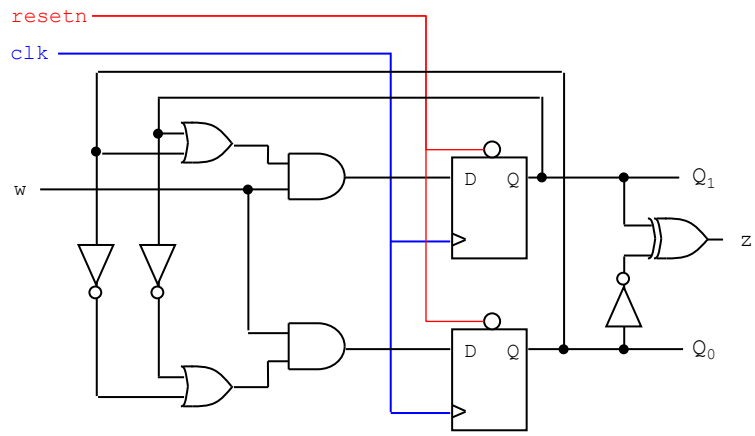

$Q_1(t+1) \leftarrow (Q_1 + Q_0)w$
$Q_0(t+1) \leftarrow \overline{Q_1Q_0}w$
$z = \overline{Q_1 \oplus Q_0}$

State Assignment:
S0: Q = 00 S1: Q = 01
S2: Q = 10 S3: Q = 11

PRESENT STATE			NEXTSTATE		
w	Q_1	Q_0 (t)	Q_1	Q_0 (t+1)	z
0	0	0	0	0	1
0	0	1	0	0	0
0	1	0	0	0	0
0	1	1	0	0	1
1	0	0	0	1	1
1	0	1	1	1	0
1	1	0	1	1	0
1	1	1	1	0	1

w	PRESENT STATE	NEXT STATE	z
0	S0	S0	1
0	S1	S0	0
0	S2	S0	0
0	S3	S0	1
1	S0	S1	1
1	S1	S3	0
1	S2	S3	0
1	S3	S2	1

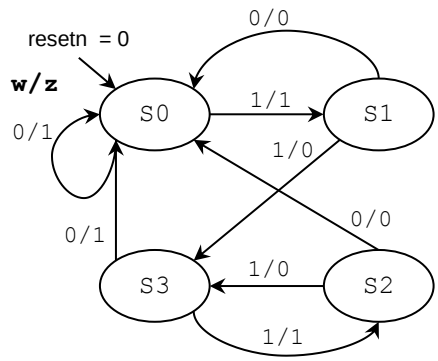

This is a Moore FSM. The output z depends only on the present state.

PROBLEM 4 (15 PTS)

- Provide the state diagram (in ASM form) of the FSM whose VHDL description is shown below. Is it a Mealy or a Moore FSM?
- Complete the Timing Diagram. (9 pts)

```
library ieee;
use ieee.std_logic_1164.all;

entity myfsm is
   port ( clk, resetn: in std_logic;
          a, b: in std_logic;
          x,w,z: out std_logic);
end myfsm;
```

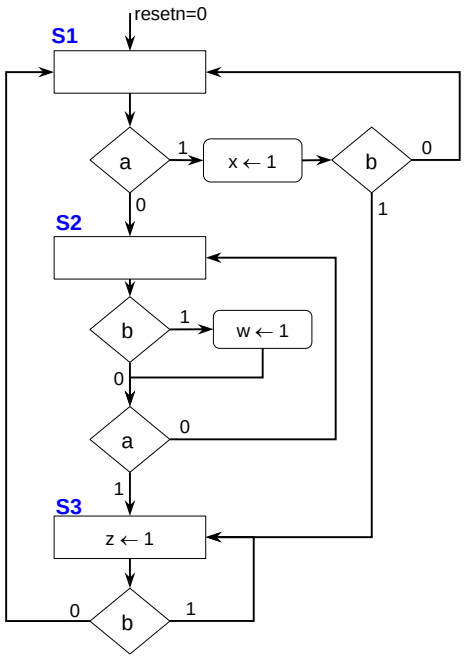


```
architecture behavioral of myfsm is
   type state is (S1, S2, S3);
   signal y: state;
begin
  Transitions: process (resetn, clk, a, b)
  begin
     if resetn = '0' then y <= S1;
     elsif (clk'event and clk = '1') then
        case y is
          when S1 =>
            if a = '1' then
              if b = '1' then y <= S3; else y <= S1; end if;
            else
              y <= S2;
            end if;

          when S2 =>
            if a = '1' then y <= S3; else y <= S2; end if;

          when S3 =>
            if b = '1' then y <= S3; else y <= S1; end if;
        end case;
     end if;
  end process;

  Outputs: process (y, a, b)
  begin
      x <= '0'; w <= '0'; z <= '0';
      case y is
         when S1 => if a = '1' then x <= '1'; end if;
         when S2 => if b = '1' then w <= '1'; end if;
         when S3 => z <= '1';
      end case;
  end process;
end behavioral;
```

This is a Mealy FSM. The outputs depend on the input as well as the present state.

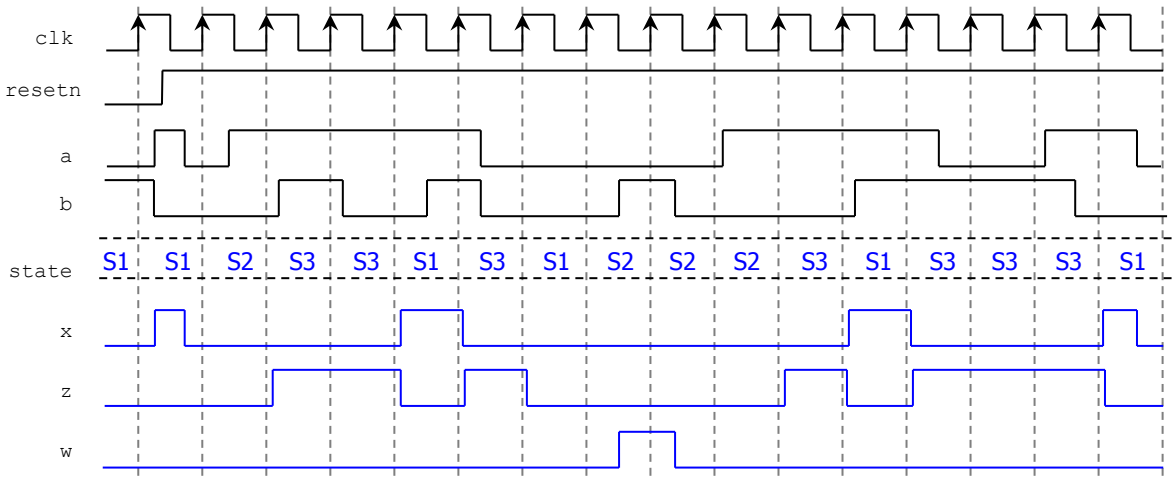

PROBLEM 5 (18 PTS)

- Complete the timing diagram of the following digital system that includes an FSM (in ASM form) and a datapath circuit. Generic components: counter, parallel access shift registers, register. See *Lecture Notes – Unit 6* for their behavior.

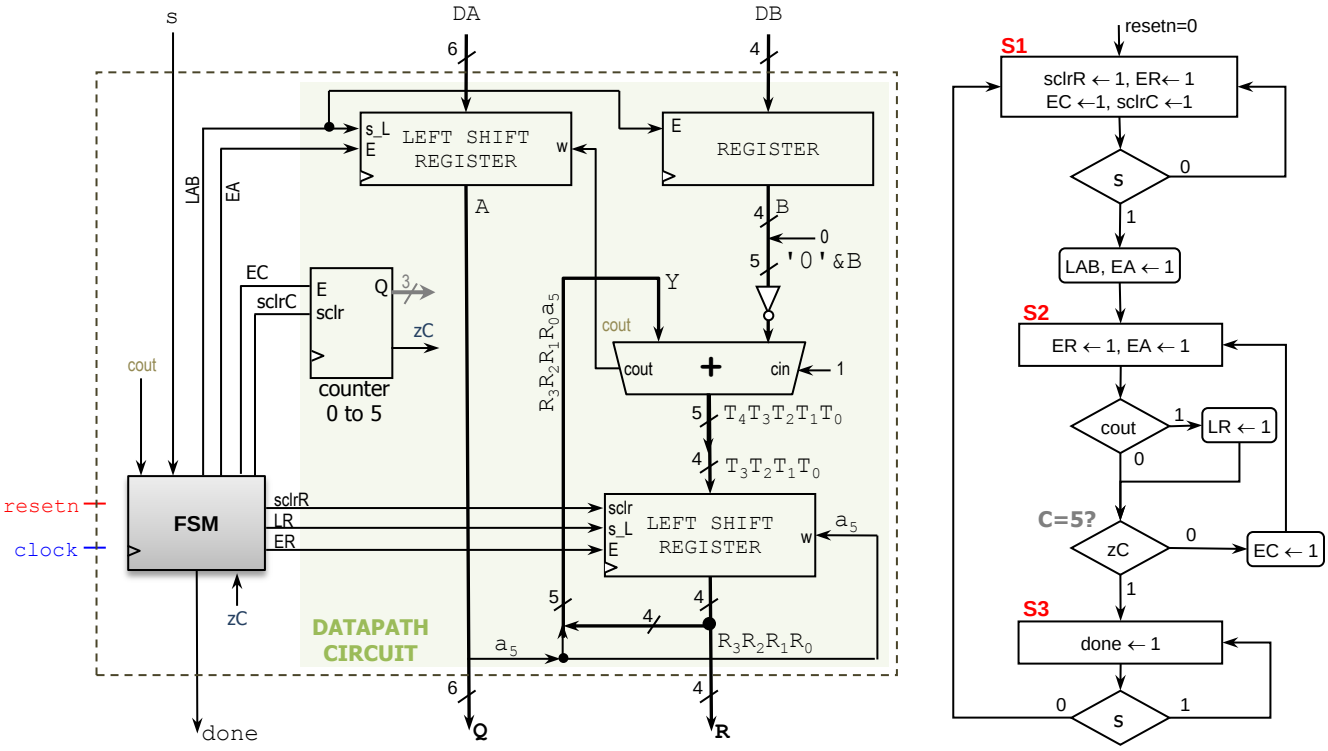

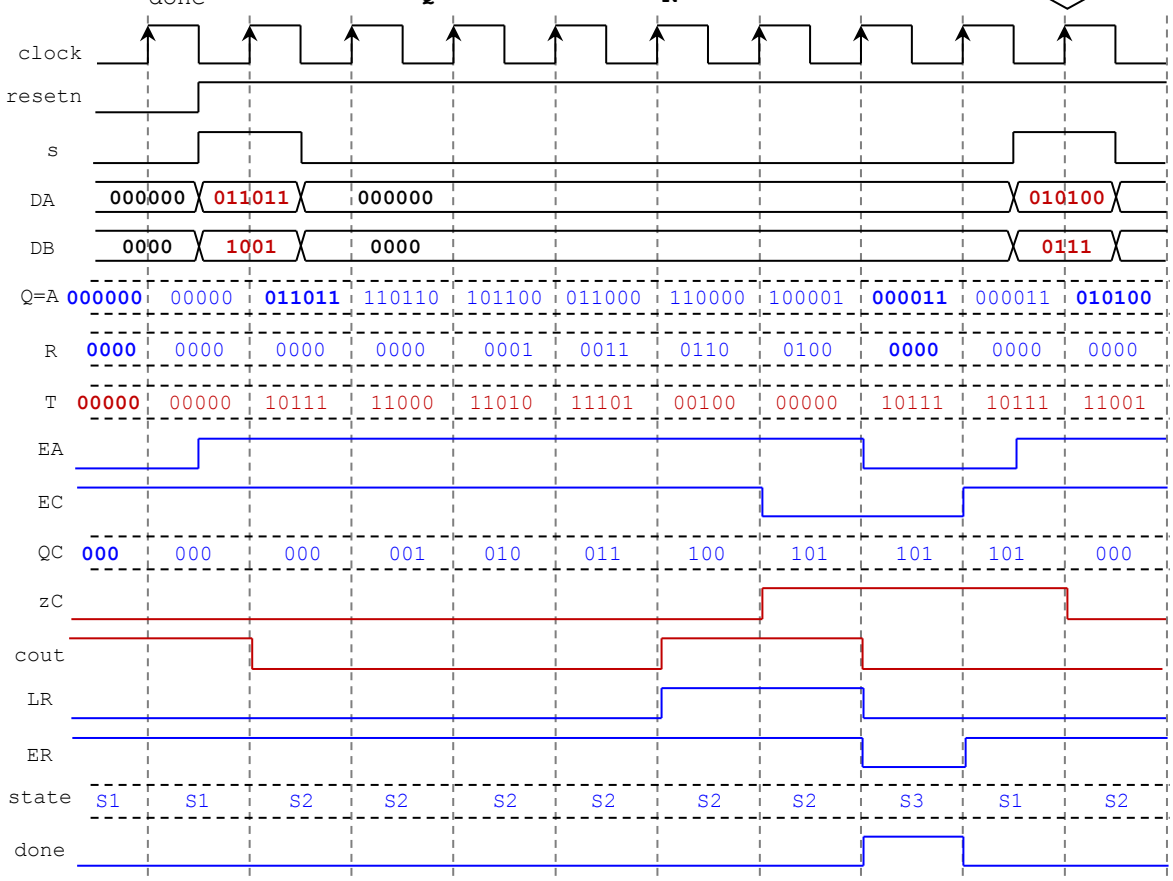

PROBLEM 6 (14 PTS)

- Attach a printout of your Project Status Report (no more than 3 pages, single-spaced, 2 columns). This report should contain the current status of the project, including more details about the design and its components. You **MUST** use the provided template (`Final Project – Report Template.docx`).